CHAPTER

3.5

OPERATIONAL AMPLIFIERS

1. $A_v = \dfrac{v_o}{v_i} = ?$

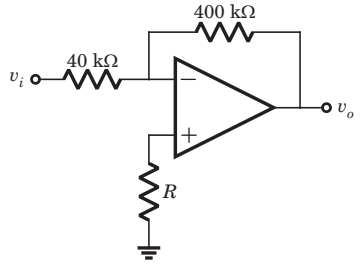

Fig. P3.5.1

(A) –10 (B) 10

(C) –11 (D) 11

2. $A_v = \dfrac{v_o}{v_i} = ?$

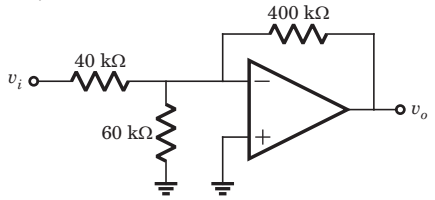

Fig. P3.5.2

(A) –10 (B) 10

(C) 13.46 (D) –13.46

3. The input to the circuit in fig. P3.5.3 is $v_i = 2\sin \omega t$ mV. The current i_o is

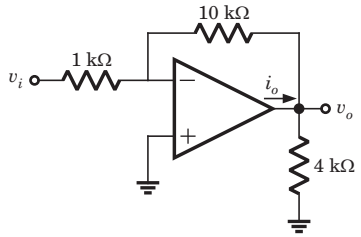

Fig. P3.5.3

(A) $-2\sin \omega t$ μA (B) $-7\sin \omega t$ μA

(C) $-5\sin \omega t$ μA (D) 0

4. In circuit shown in fig. P3.5.4, the input voltage v_i is 0.2 V. The output voltage v_o is

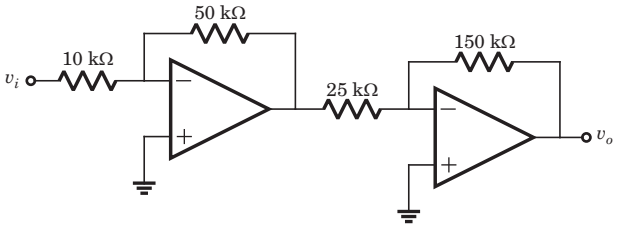

Fig. P3.5.4

(A) 6 V (B) –6 V

(C) 8 V (D) –8 V

5. For the circuit shown in fig. P3.5.5 gain is $A_v = v_o/v_i = -10$. The value of R is

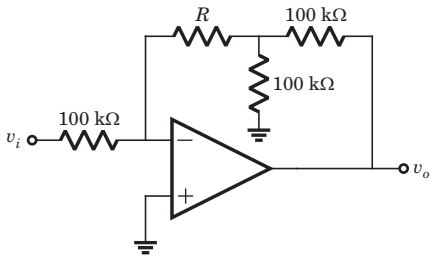

Fig. P3.5.5

(A) 600 kΩ (B) 450 kΩ

(C) 4.5 MΩ (D) 6 MΩ

6. For the op-amp circuit shown in fig. P3.5.6 the voltage gain $A_v = v_o/v_i$ is

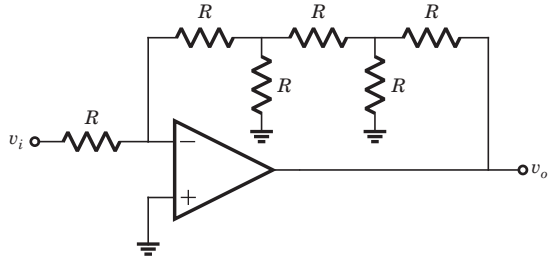

Fig. P3.5.6

(A) –8 (B) 8

(C) –10 (D) 10

7. For the op-amp shown in fig. P3.5.7 open loop differential gain is $A_{od} = 10^3$. The output voltage v_o for $v_i = 2$ V is

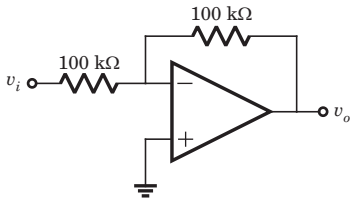

Fig. P3.5.7

(A) –1.996 (B) –1.998

(C) –2.004 (D) –2.006

8. The op-amp of fig. P3.5.8 has a very poor open-loop voltage gain of 45 but is otherwise ideal. The closed-loop gain of amplifier is

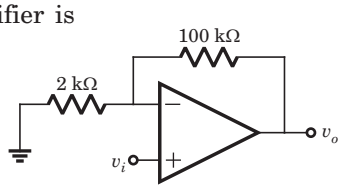

Fig. P3.5.8

(A) 20 (B) 4.5

(C) 4 (D) 5

9. For the circuit shown in fig. P3.5.9 the input voltage v_i is 1.5 V. The current i_o is

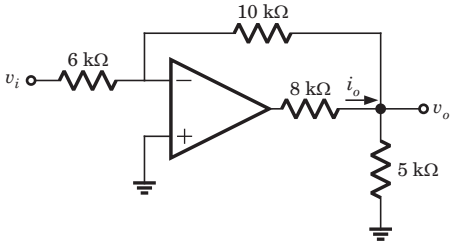

Fig. P3.5.9

(A) –1.5 mA (B) 1.5 mA

(C) –0.75 mA (D) 0.75 mA

10. In the circuit of fig. P3.5.10 the output voltage v_o is

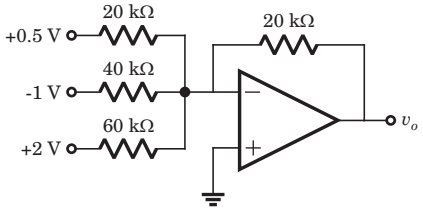

Fig. P3.5.10

(A) 2.67 V (B) –2.67 V

(C) –6.67 V (D) 6.67 V

11. In the circuit of fig. P3.5.11 the voltage v_{i1} is $(1 + 2\sin \omega t)$ mV and $v_{i2} = -10$ mV. The output voltage v_o is

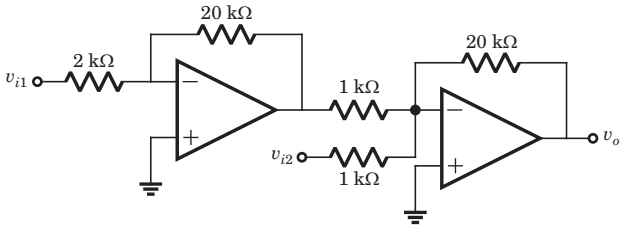

Fig. P3.5.11

(A) $-0.4(1 + \sin \omega t)$ mV (B) $0.4(1 + \sin \omega t)$ mV

(C) $0.4(1 + 2\sin \omega t)$ mV (D) $-0.4(1 + 2\sin \omega t)$ mV

12. For the circuit in fig. P3.5.12 the output voltage is $v_o = 2.5$ V in response to input voltage $v_i = 5$ V. The finite open-loop differential gain of the op-amp is

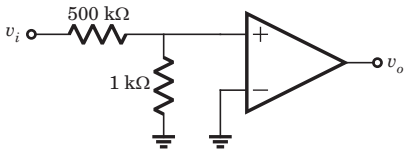

Fig. P3.5.12

(A) 5×10^4 (B) 250.5

(C) 2×10^4 (D) 501

13. $v_o = ?$

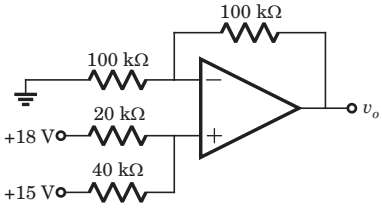

Fig. P3.5.13

(A) 34 V (B) –17 V

(C) 32 V (D) –32 V

28. For the circuit shown in fig. P3.5.28 the input resistance is

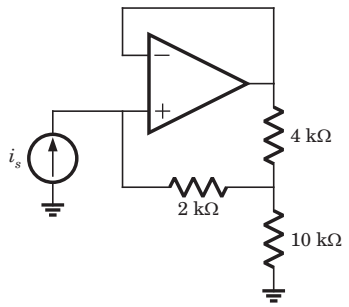

Fig. P3.5.28

(A) 38 kΩ (B) 17 kΩ

(C) 25 kΩ (D) 47 kΩ

29. In the circuit of fig. P3.5.29 the op-amp slew rate is $SR = 0.5$ V/μs. If the amplitude of input signal is 0.02 V, then the maximum frequency that may be used is

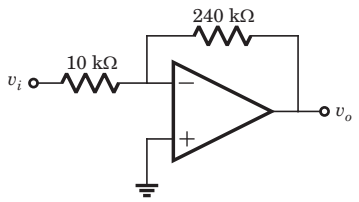

Fig. P3.5.29

(A) 0.55×10^6 rad/s (B) 0.55 rad/s

(C) 1.1×10^6 rad/s (D) 1.1 rad/s

30. In the circuit of fig. P3.5.30 the input offset voltage and input offset current are $V_{io} = 4$ mV and $I_{io} = 150$ nA. The total output offset voltage is

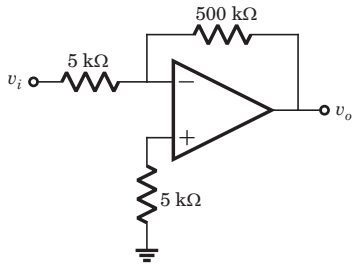

Fig. P3.5.30

(A) 479 mV (B) 234 mV

(C) 168 mV (D) 116 mV

31. $i_o = ?$

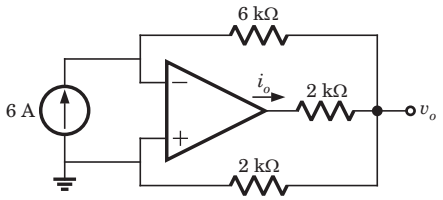

Fig. S3.5.31

(A) –18 A (B) 18 A

(C) –36 A (D) 36 A

Statement for Q.32–33:

Consider the circuit shown below

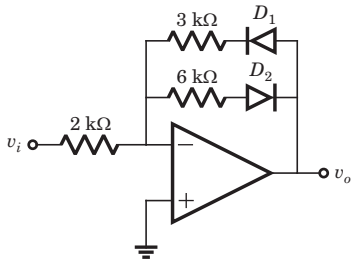

Fig. P3.5.32–33

32. If $v_i = 2$ V, then output v_o is

(A) 4 V (B) –4 V

(C) 3 V (D) –3 V

33. If $v_i = -2$ V, then output v_o is

(A) –6 V (B) 6 V

(C) –3 V (D) 3 V

34. $v_o(t) = ?$

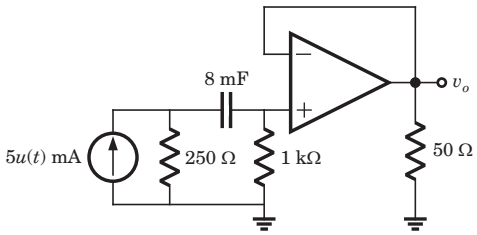

Fig. P3.5.34

(A) $e^{-\frac{t}{10}} u(t)$ V (B) $-e^{-\frac{t}{10}} u(t)$ V

(C) $e^{-\frac{t}{1.6}} u(t)$ V (D) $-e^{-\frac{t}{1.6}} u(t)$ V

35. The circuit shown in fig. P3.5.35 is at steady state before the switch opens at $t = 0$. The $v_C(t)$ for $t > 0$ is

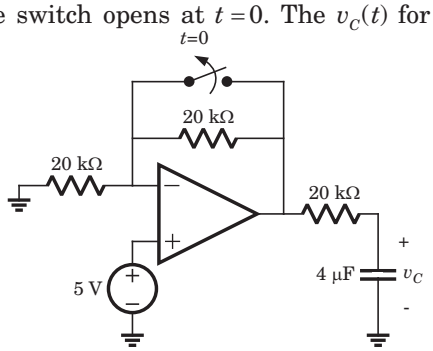

Fig. P3.5.35

(A) $10 - 5e^{-12.5t}$ V (B) $5 + 5e^{-12.5t}$ V

(C) $5 + 5e^{-\frac{t}{12.5}}$ V (D) $10 - 5e^{-\frac{t}{12.5}}$ V

36. The LED in the circuit of fig. P3.5.36 will be on if v_i is

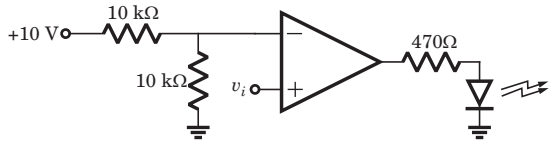

Fig. P3.5.36

(A) > 10 V (B) < 10 V

(C) > 5 V (D) < 5 V

37. In the circuit of fig. P3.5.37 the CMRR of the op-amp is 60 dB. The magnitude of the v_o is

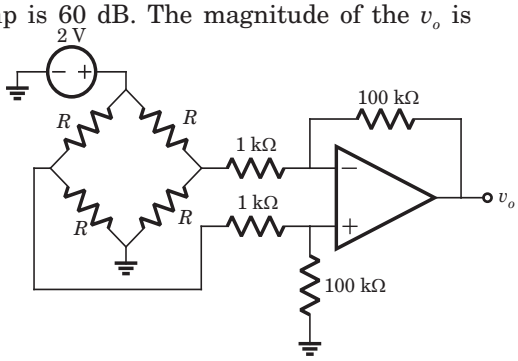

Fig. P3.5.37

(A) 1 mV (B) 100 mV

(C) 200 mV (D) 2 mV

38. The analog multiplier X of fig. P.3.5.38 has the characteristics $v_p = v_1 v_2$. The output of this circuit is

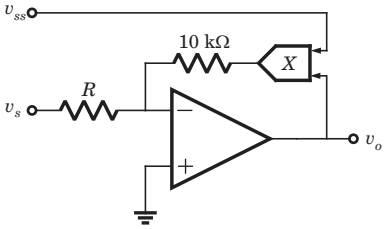

Fig. P3.5.38

(A) $v_s v_{ss}$ (B) $-v_s v_{ss}$

(C) $-\frac{v_s}{v_{ss}}$ (D) $\frac{v_s}{v_{ss}}$

39. If the input to the ideal comparator shown in fig. P3.5.39 is a sinusoidal signal of 8 V (peak to peak) without any DC component, then the output of the comparator has a duty cycle of

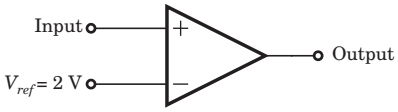

Fig. P3.5.39

(A) $\frac{1}{2}$ (B) $\frac{1}{3}$

(C) $\frac{1}{6}$ (D) $\frac{1}{12}$

40. In the op-amp circuit given in fig. P3.5.40 the load current i_L is

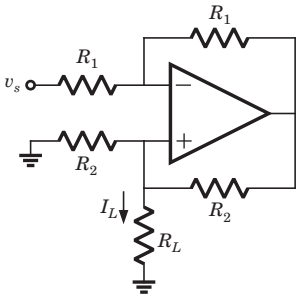

Fig. P3.5.40

(A) $-\frac{v_s}{R_2}$ (B) $\frac{v_s}{R_2}$

(C) $-\frac{v_s}{R_L}$ (D) $\frac{v_s}{R_L}$

41. In the circuit of fig. P3.5.41 output voltage is $|v_o| = 1$ V for a certain set of ω, R, an C. The $|v_o|$ will be 2 V if

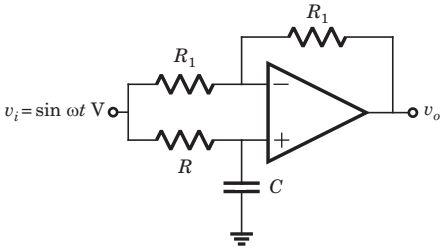

Fig. P3.5.41

(A) ω is doubled (B) ω is halved

(C) R is doubled (D) None of the above

42. In the circuit of fig. P3.5.42. the 3 dB cutoff frequency is

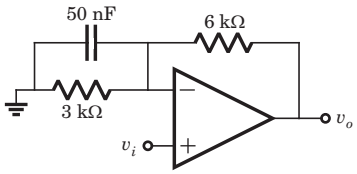

Fig. P3.5.42

(A) 10 kHz (B) 1.59 kHz

(C) 354 Hz (D) 689 Hz

43. The phase shift oscillator of fig. P3.5.43 operate at $f = 80$ kHz. The value of resistance R_F is

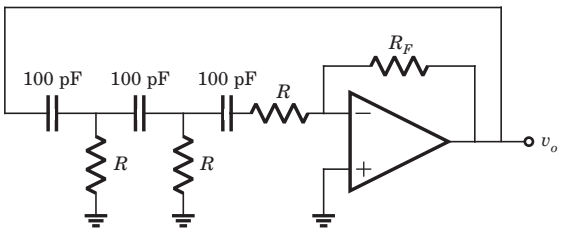

Fig. P3.5.43

(A) 148 kΩ (B) 236 kΩ

(C) 438 kΩ (D) 814 kΩ

44. The value of C required for sinusoidal oscillation of frequency 1 kHz in the circuit of fig. P3.5.44 is

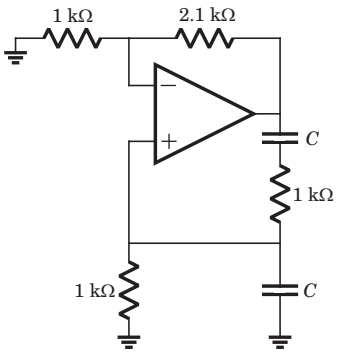

Fig. P3.5.44

(A) $\frac{1}{2\pi}$ μF (B) 2π μF

(C) $\frac{1}{2\pi\sqrt{6}}$ μF (D) $2\pi\sqrt{6}$ μF

45. In the circuit shown in fig. P3.5.45 the op-amp is ideal. If $\beta_F = 60$, then the total current supplied by the 15 V source is

(A) 123.1 mA (B) 98.3 mA

(C) 49.4 mA (D) 168 mA

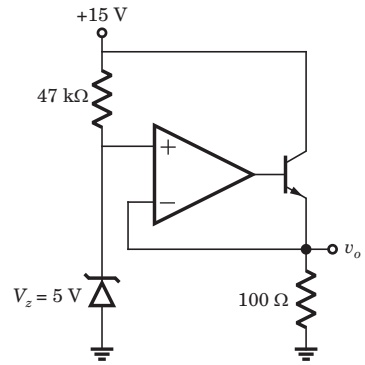

Fig. P3.5.45

46. In the circuit in fig. P3.5.46 both transistor Q_1 and Q_2 are identical. The output voltage at $T = 300$ K is

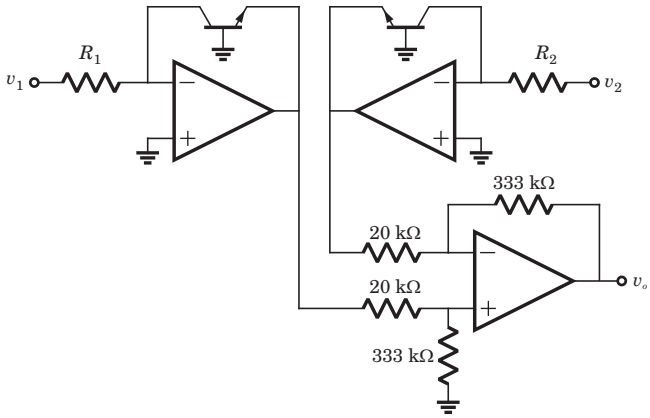

Fig. P3.5.46

(A) $2\log_{10}\left(\frac{v_2}{v_1}\frac{R_1}{R_2}\right)$ (B) $\log_{10}\left(\frac{v_2}{v_1}\frac{R_1}{R_2}\right)$

(C) $2.303\log_{10}\left(\frac{v_2}{v_1}\frac{R_1}{R_2}\right)$ (D) $4.605\log_{10}\left(\frac{v_2}{v_1}\frac{R_1}{R_2}\right)$

47. In the op-amp series regulator circuit of fig. P8.3.47 $V_z = 6.2$ V, $V_{BE} = 0.7$ V and $\beta = 60$. The output voltage v_o is

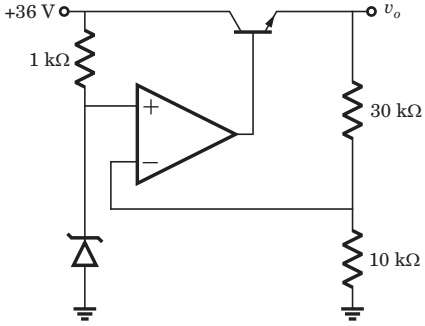

Fig. P3.5.47

(A) 35.8 V (B) 24.8 V

(C) 29.8 V (D) None of the above

****

26. (C) $v_{2+} = v_{2-} = 0$ V, current through 6 V source

$i = \frac{6}{3k} = 2$ mA, $v_o = -2m(3k + 2k) = -10$ V

27. (D) $v_+ = \frac{v_o(1)}{1+3} = \frac{v_o}{4}$, $v_- = \frac{v_i(2)}{2+1} + \frac{v_o(1)}{2+1}$

$v_+ = v_-$, $\frac{v_o}{4} = \frac{v_o}{3} + \frac{2v_i}{3}$, $\frac{v_o}{v_i} = -8$

28. (B) Since op-amp is ideal

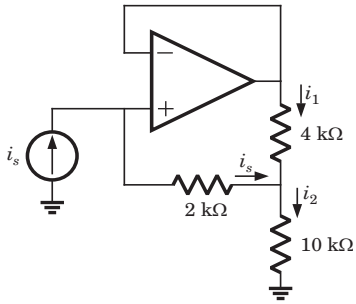

Fig. S3.5.28

$v_- = v_+$, $2ki_s = 4ki_1 \Rightarrow i_s = 2i_1$

$v_s = 2ki_s + 10ki_2$

$i_2 = i_s + i_1$, $v_s = 2ki_s + 10k(i_s + i_1)$, $i_1 = \frac{i_s}{2}$

$v_s = 2ki_s + 10k\left(i_s + \frac{i_s}{2}\right) \Rightarrow \frac{v_s}{i_s} = 17k = R_{in}$

29. (C) Closed loop gain $A = \left|\frac{R_F}{R_1}\right| = \frac{240k}{10k} = 24$

The maximum output voltage $v_{om} = 24 \times 0.02 = 0.48$ V

$\omega \le \frac{SR}{v_{om}} = \frac{0.5/\mu}{0.48} = 1.1 \times 10^6$ rad/s

30. (A) The offset due to V_{io} is $v_o = \left(1 + \frac{R_1}{R_1}\right)V_{io}$

$= \left(1 + \frac{500}{5}\right)4m = 404$ mV

Due to I_{io}, $v_o = R_F I_{io} = (500k)(150n) = 75$ mV

Total offset voltage $v_o = 404 + 75 = 479$ mV

31. (A) $6 = \frac{-v_o}{6k}$, $i_o = -6 + \frac{v_o}{3k}$

$i_o = -6 + \frac{-6(6k)}{3k} = -18$ A.

32. (B) If $v_i > 0$, then $v_o < 0$, D_1 blocks and D_2 conducts

$A_v = -\frac{6k}{3k} = -2 \Rightarrow v_o = (-2)(2) = -4$ V

33. (D) If $v_i < 0$, then $v_o > 0$, D_2 blocks and D_1 conduct

$A_v = -\frac{3k}{2k} = -1.5$, $v_o = (-2)(-1.5) = 3$ V

34. (A) Voltage follower $v_o = v_- = v_+$

$v_+(0^+) = 5m(250 \,||\, 1000) = 1$ V, $v_+(\infty) = 0$

$\tau = 8m(1000 + 250) = 10$ s

35. (A) $v_c(0^-) = 5$ V $= v_c(0^+) = 5$ V

For $t > 0$ the equivalent circuit is shown in fig. S3.5.35

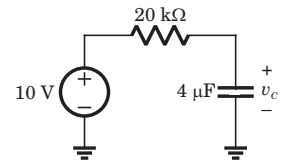

Fig. S3.5.35

$\tau = 20k \times 4\mu = 0.08$ s

$v_c = 10 + (5 - 10)e^{-\frac{t}{0.08}} = 10 - 5e^{-12.5t}$ V for $t > 0$

36. (C) $v_- = \frac{(10)(10k)}{10k + 10k} = 5$ V

When $v_+ > 5$ V, output will be positive and LED will be on. Hence (C) is correct.

37. (B) $v_+ = (2)\frac{R}{2R} = 1$ V, $v_- = (2)\frac{R}{2R} = 1$ V, $v_d = 0$

$V_{CM} = \frac{v_+ + v_-}{2} = 1$, $v_o = \frac{R_F}{1}\frac{V_{CM}}{CMRR}$

$CMRR = 60$ dB $= 10^3$, $v_o = \frac{100}{1}\frac{1}{10^3} = 100$ mV

38. (C) $v_+ = 0 = v_-$,

Let output of analog multiplier be v_p.

$\frac{v_s}{R} = -\frac{v_p}{R} \Rightarrow v_s = -v_p$, $v_p = v_{ss}v_o$

$v_s = -v_{ss}v_o$, $v_o = -\frac{v_s}{v_{ss}}$

39. (B) When $v_i > 2$ V, output is positive. When $v_i < 2$ V, output is negative.

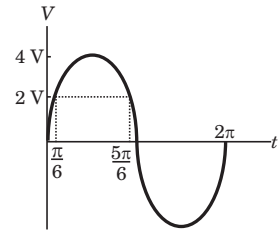

Fig. S3.5.39

Duty cycle $= \dfrac{T_{ON}}{T} = \dfrac{\frac{5\pi}{6} - \frac{\pi}{6}}{2\pi} = \dfrac{1}{3}$

40.(A) $\dfrac{v_s - v_-}{R_1} = \dfrac{v_- - v_o}{R_1} \quad \Rightarrow \quad 2v_1 = v_s + v_o$

$$\frac{v_+}{R_2} + \frac{v_+}{R_L} + \frac{v_+ - v_o}{R_2} = 0 \quad \Rightarrow \quad v_o = \left(2 + \frac{R_2}{R_L}\right) v_+$$

$$2v_- = v_s + \left(2 + \frac{R_2}{R_L}\right) v_+ \ , \ v_- = v_+$$

$$\Rightarrow 0 = v_s + \frac{R_2}{R_L} v_+$$

$$v_+ = -\frac{R_L}{R_2} v_s \ , \quad i_L = \frac{v_+}{R_L} \ , \quad i_L = -\frac{v_s}{R_2}$$

41. (D) This is a all pass circuit

$$\frac{v_o}{v_i} = H(j\omega) = \frac{1 - j\omega RC}{1 + j\omega RC} \ , \quad |H(j\omega)| = \frac{\sqrt{1 + (\omega R^2 C)^2}}{\sqrt{1 + (\omega RC)^2}} = 1$$

Thus when ω and R is changed, the transfer function is unchanged.

42. (B) Let $R_1 = 3\ \text{k}\Omega$, $R_2 = 6\ \text{k}\Omega$, $C = 50$ nF

$$\frac{v_i}{R_1 \,||\left(\frac{1}{sC}\right)} + \frac{v_i - v_o}{R_2} = 0 \quad \Rightarrow \quad \frac{v_i}{\left(\frac{R_1}{1 + sR_1C}\right)} + \frac{v_i}{R_2} = \frac{v_o}{R_2}$$

$$v_i \left[\frac{R_2}{R_1}(1 + sR_1C) + 1\right] = v_o$$

$$\frac{v_i}{R_1}\left[R_2 + R_1 + sR_1R_2C\right] = v_o$$

$$\frac{v_o}{v_i} = \frac{R_2 + R_1}{R_1}\left[1 + \frac{sR_1R_2C}{R_1 + R_2}\right]$$

$$\Rightarrow \quad \frac{v_o}{v_i} = \left(1 + \frac{R_2}{R_1}\right)\left(1 + s(R_1 \,||\, R_2)C\right)$$

$$f_{3dB} = \frac{1}{2\pi(R_1 \,||\, R_2)C}$$

$$= \frac{1}{2\pi(3\text{k} \,||\, 6\text{k})50\text{n}} = \frac{1}{2\pi(2\text{k})50\text{n}} = 1.59\ \text{kHz}$$

43. (B) The oscillation frequency is

$$f = \frac{1}{2\pi\sqrt{6}RC} \quad \Rightarrow \quad 80\text{k} = \frac{1}{2\pi\sqrt{6}R(100\pi)}$$

$$\Rightarrow R = \frac{1}{(80\text{k})(2\pi\sqrt{6})(100\pi)} = 8.12\ \text{k}\Omega$$

$$\frac{R_F}{R} = 29 \quad \Rightarrow \quad R_F = (8.12\text{k})(29) = 236\ \text{k}\Omega$$

44. (A) This is Wien-bridge oscillator. The ratio $\dfrac{R_2}{R_1} = \dfrac{2.1\text{k}}{1\text{k}} = 2.1$ is greater than 2. So there will be oscillation

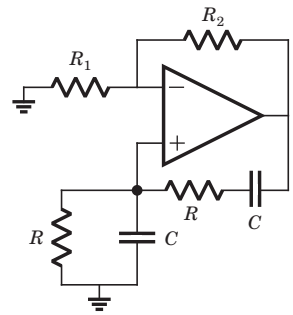

Fig. S3.5.44

$$\text{Frequency} = \frac{1}{2\pi RC} \quad \Rightarrow \quad 1 \times 10^3 = \frac{1}{2\pi(1\text{k})C}$$

$$C = \frac{1}{2\pi}\ \mu\text{F}$$

45. (C) $v_+ = 5\ \text{V} = v_- = v_E$,

The input current to the op-amp is zero.

$$i_{+15V} = i_Z + i_C = i_Z + \alpha_F i_E$$

$$= \frac{15 - 5}{47\text{k}} + \frac{60}{61}\left(\frac{5}{100}\right) = 49.4\ \text{mA}$$

46. (B) $v_o = \dfrac{333}{20}(v_{o1} - v_{o2})$

$$v_{o1} = -v_{BE1} - V_t \ln\left(\frac{i_{c1}}{i_s}\right), \ v_{o2} = -v_{BE2} - V_t \ln\left(\frac{i_{c2}}{i_s}\right)$$

$$v_{o1} - v_{o2} = -V_t \ln\left(\frac{i_{c1}}{i_{c2}}\right) = V_t \ln\left(\frac{i_{c2}}{i_{c1}}\right)$$

$$i_{c1} = \frac{v_1}{R_1} \ , \quad i_{c2} = \frac{v_2}{R_2}$$

$$v_{o1} - v_{o2} = V_t \ln\left(\frac{v_2}{R_2}\frac{R_1}{v_1}\right), \quad V_t = 0.0259\ \text{V}$$

$$v_o = \frac{333}{20}(v_{o1} - v_{o2}) = \frac{333}{20}(0.0259)\ln\left(\frac{v_2}{v_1}\frac{R_1}{R_2}\right)$$

$$= 0.4329 \ln\left(\frac{v_2}{v_1}\frac{R_1}{R_2}\right) = 0.4329(2.3026)\log_{10}\left(\frac{v_2}{v_1}\frac{R_1}{R_2}\right)$$

$$= \log_{10}\left(\frac{v_2}{v_1}\frac{R_1}{R_2}\right)$$

47. (B) $v_+ = v_-$, $v_Z = \dfrac{10v_o}{10 + 30} = \dfrac{v_o}{4}$

$$v_o = 4v_z = 6.2 \times 4 = 24.8\ \text{V}$$

****